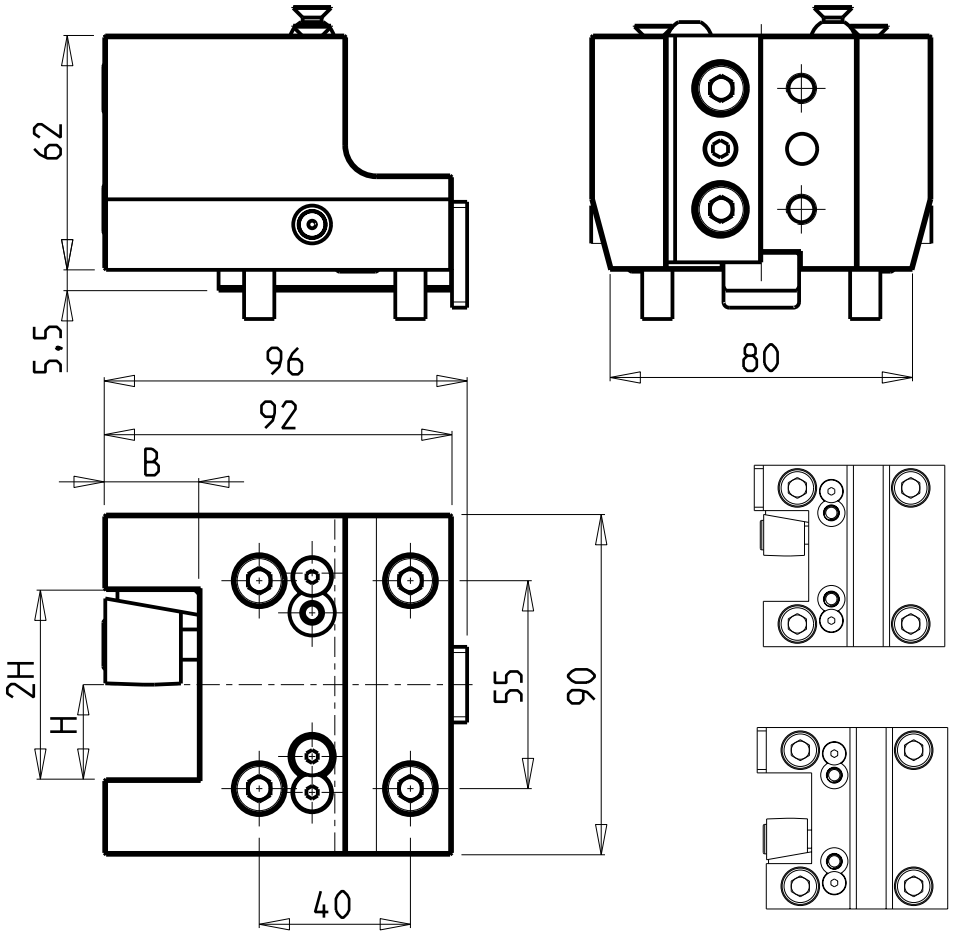

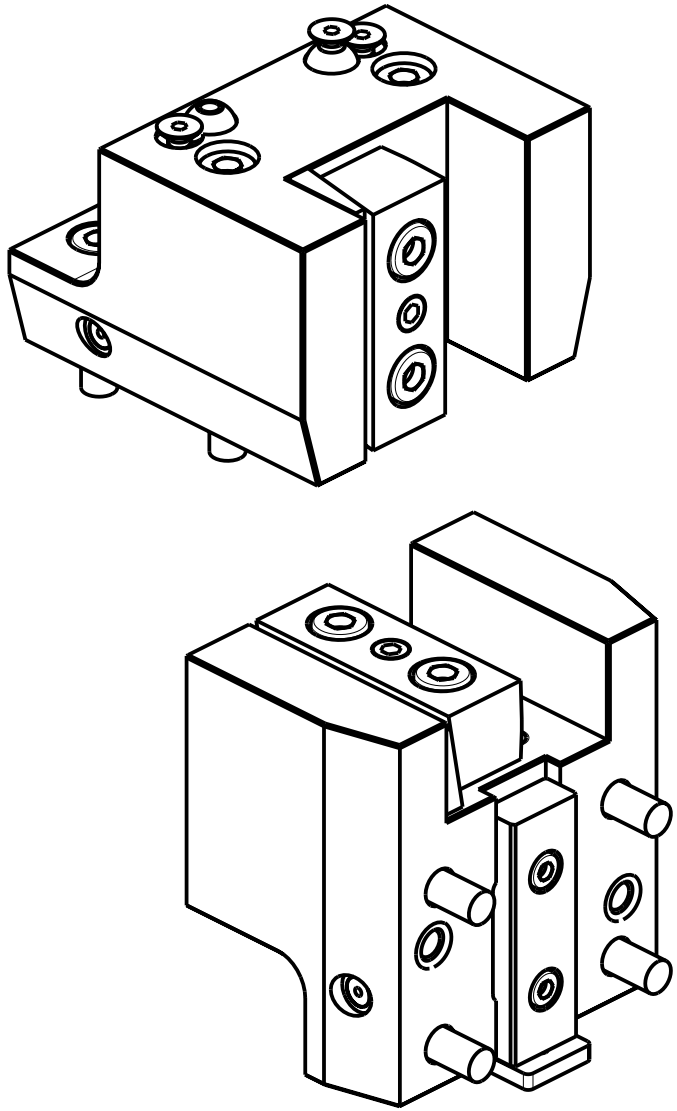

Cod. MT	N°Utensili N°Tools N°Werkzeuge	Reversibile lato mandrino/contromandrino Reversible sub/main spindle side Umkehrbare Spindelseite/ Gegenspindelseite	Misure Dimensions Masse	B	H
NKM0162510	1	X	mm	25	25

NAKAMURA-TOME

MOD: WT100 - WY100 - WY100II 12 ST. - SUPER NTY3 - NTY3-100 12ST. - SUPER NTMX - SUPER NTMXL - MX-5 - NTJ100 SC100 - SC100X² - MX100

PORTAUTENSILE RADIALE SINGOLO QD=25mm

Radial single static tool QD=25mm

Radial Single-Werkzeughalter QD=25mm

M.T. srl
Via Casino Albini 480
Tel. 0541/956034-957884
Fax 0541/956341
47842 S. GIOVANNI IN M. (RN)
e-mail: mtma@mtmarchetti.com
http://www.mtmarchetti.com

Subject to change without notice.