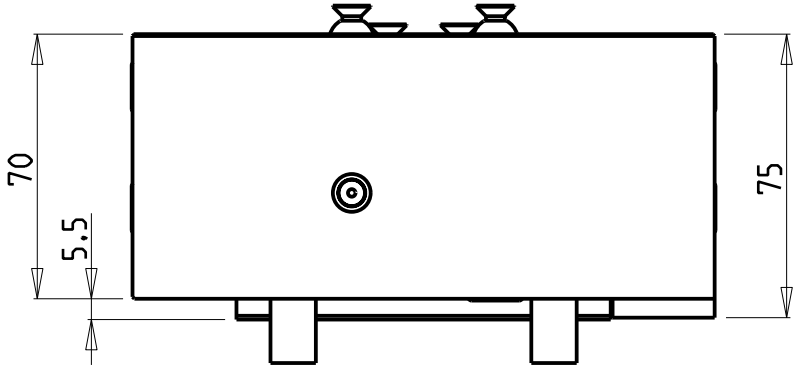

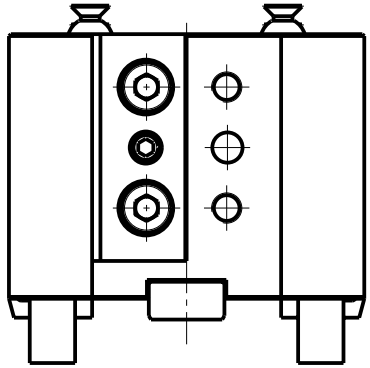

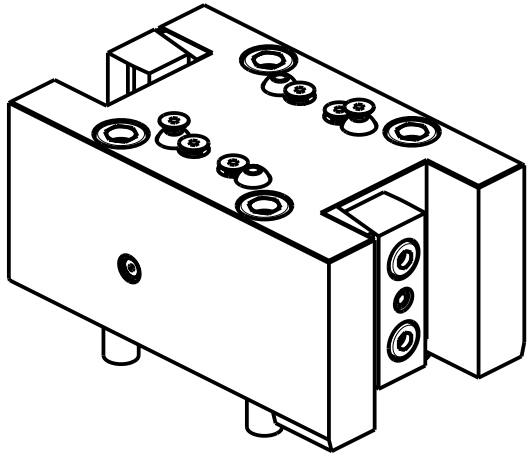

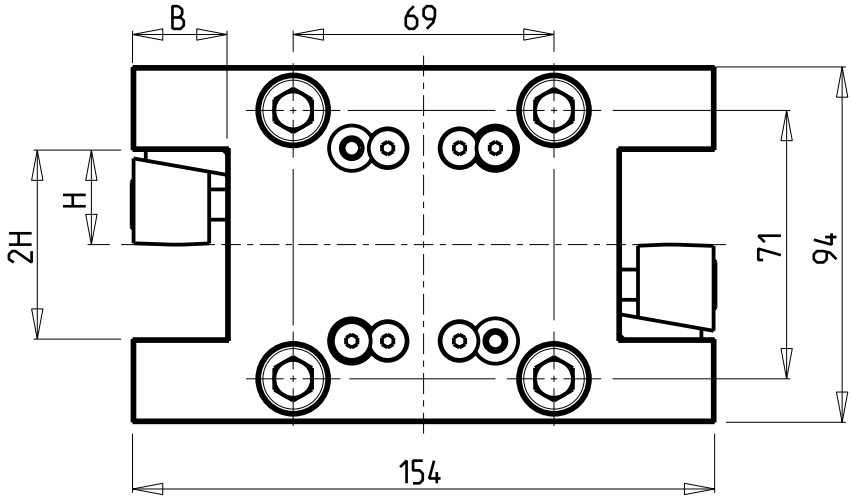

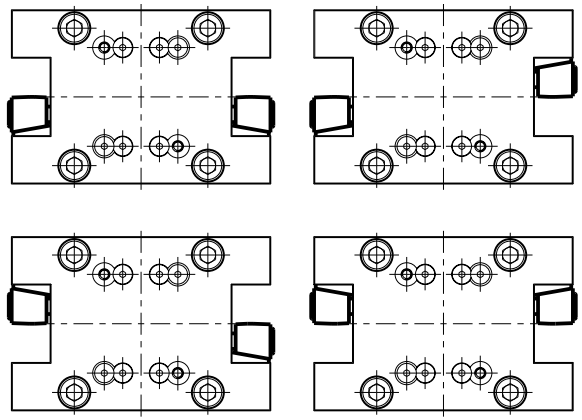

Cod. MT	N°Utensili N°Tools N°Werkzeuge	Reversibile lato mandrino/contromandrino Reversible sub/main spindle side Umkehrbare Spindelseite/ Gegenspindelseite	Lubrificazione est. Ext. coolant Aussenkuehlung	Misure Dimensions Masse	B	H
NKM0532500	2	X	X	mm	25	25
NKM0532540	2	X	X	Inch	1"	1"

NAKAMURA-TOME

WT300 - SC300 - SC300II 12ST. -TMC200/300M - SUPER NTX - SUPER NTXL - TW20M/MY/MM/MMY/MMYY 12ST. TW30M/MY/MM/MMY/MMYY 16ST.

PORTAUTENSILE RADIALE DOPPIO QD=25mm / QD=1"
Radial double static tool QD=25mm / QD=1"
Radial Doppel-Werkzeughalter QD=25mm / QD=1"

M.T. srl
Via Casino Albini 480
Tel. 0541/956034-957884
Fax 0541/956341
47842 S. GIOVANNI IN M. (RN)
e-mail: mtma@mtmarchetti.com
http://www.mtmarchetti.com

Subject to change without notice.