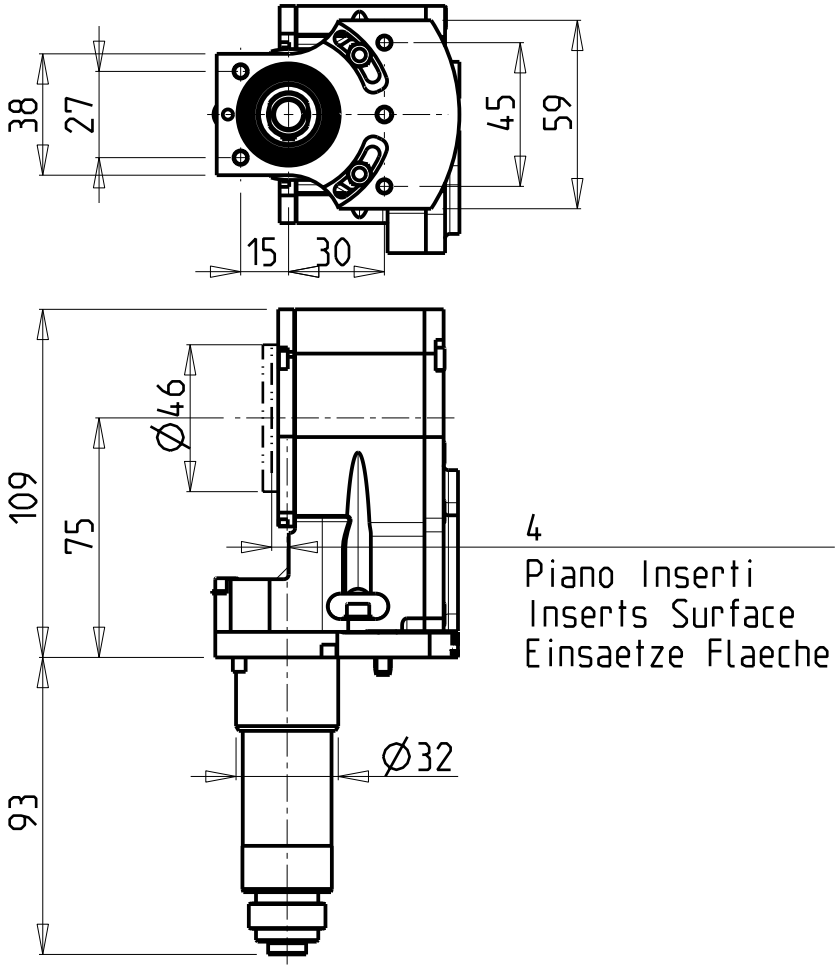

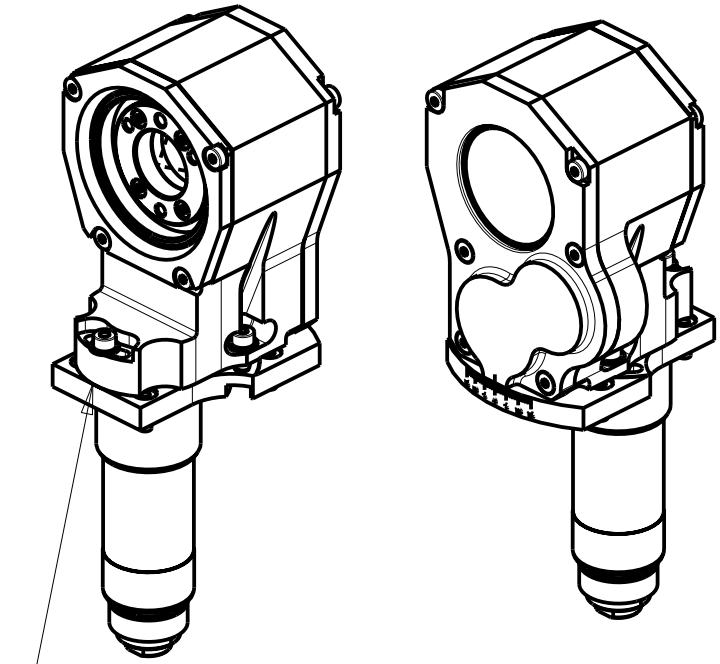

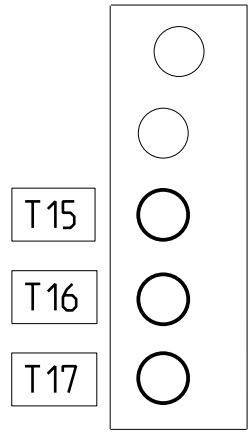

Cod. MT	I	RPM	Lubrificazione est. Ext. coolant Aussenkuehlung
NMR0010112	2:1	3000	X

Fresa non inclusa: Milling-cutter not included: Fraese nicht inbegriffen:
SANDVIK Coromill 325 cod. 325-12AP40-16M

NOMURA

MOD: NN20J - NN20J2 - NN20JS

MODULO MOTORIZZATO TURBINATORE RIDOTTO I=2:1
Driven whirling tool geared-down I=2:1
Gewindewirbeleinrichtung untersetzt I=2:1

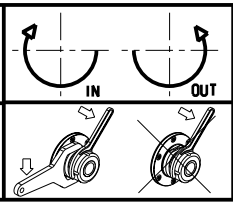

M.T. srl
Via Casino Albini 480
Tel. 0541/956034-957884
Fax 0541/956341
47842 S. GIOVANNI IN M. (RN)
e-mail: mtma@mtmarchetti.com
http://www.mtmarchetti.com

NOM370-1-00

Subject to change without notice.

09/2024