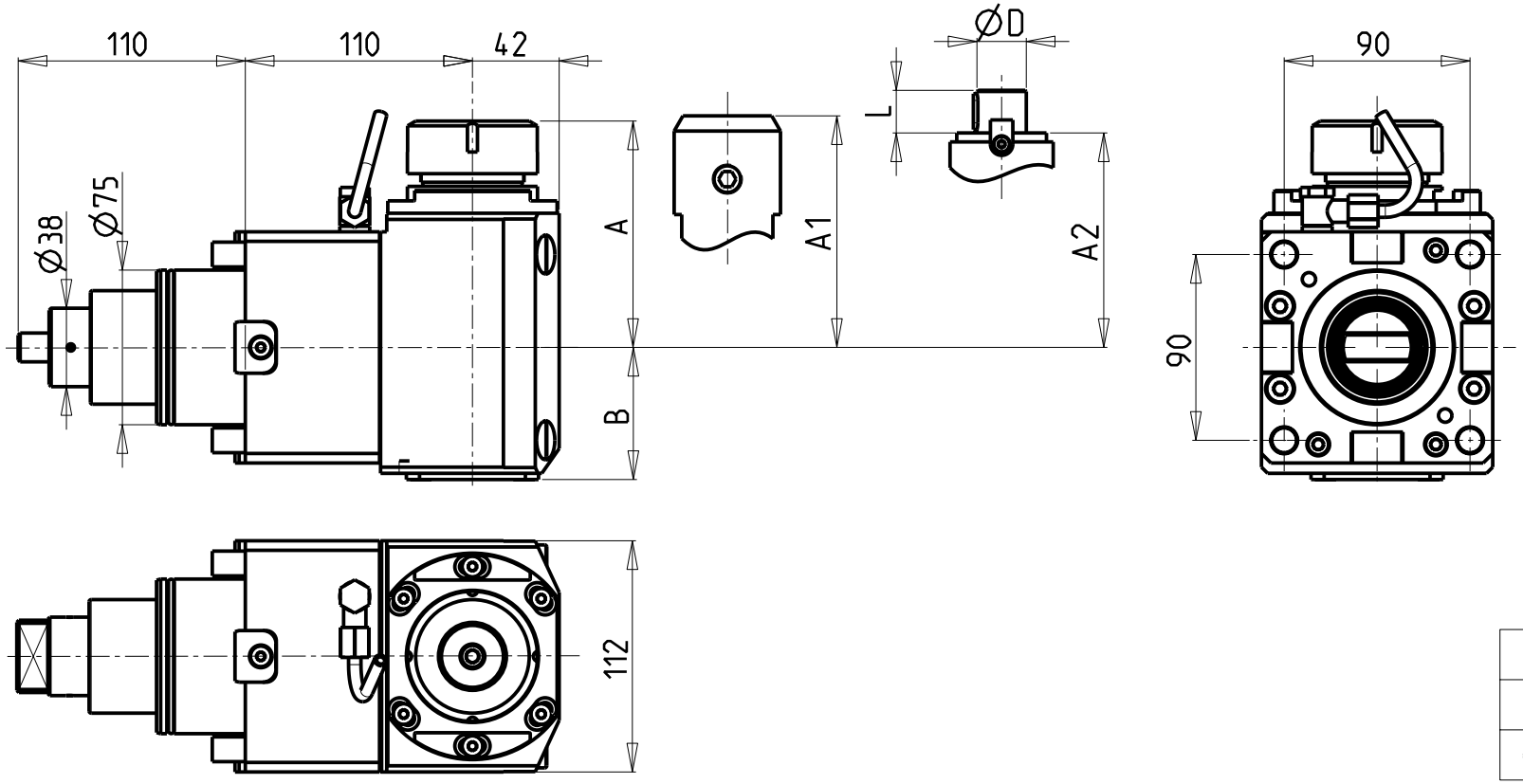

CUSCINETTI MAGGIORATI PER LAVORAZIONI PESANTI

Reinforced bearings for heavy machining

Vergroesserte lager fuer schwerere Bearbeitungen

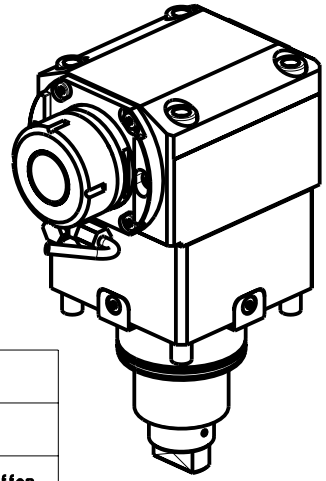

- Chiave inclusa
- Key included
- Schluessel inbegriffen

Cod. MT	Mandrino Spindle Spindel	I	RPM	Coppia Max Max Torque Max Drehmoment	Reversibile lato mandrino/contromandrino Reversible sub/main spindle side Umkehrbare Spindelseite/ Gegenspindelseite	Lubrificazione int. Coolant through Innenkuehlung	Lubrificazione est. Ext. coolant Aussenkuehlung	A	A1	A2	B	D	L	CHIAVI NON INCLUSE Keys not included Schluessel nicht einbegriffen	
DW01340140	ER40	1:1	6000	140Nm	X	-	X	109.7	-	-	64	-	-	CHSTER40	OKU0430007 •
DW01340240	ER40	1:1	6000	140Nm	X	P=70bar	X	109.7	-	-	76.5	-	-	CHSTER40	OKU0430007 •
DW01340725	WELDON 25	1:1	6000	140Nm	X	-	X	-	109.5	-	64	-	-	-	-
DW01340825	WELDON 25	1:1	6000	140Nm	X	P=70bar	X	-	109.5	-	76.5	-	-	-	-
DW01340522	Ø22x19	1:1	6000	140Nm	X	-	X	-	-	89	64	22	19	CH_VTCROCE_M10 •	OKU0430007 •

HYUNDAI-WIA (KIA)

MOD: SKT400M/LMC - L400/500 MA/MC/LMC - LV8500RM/LM - L5100LM/LMC/LY

MODULO MOTORIZZATO ASSIALE MAGGIORATO H=110mm
Axial reinforced driven tool H=110mm
Axial angetriebenes Werkzeug vergroesset H=110mm

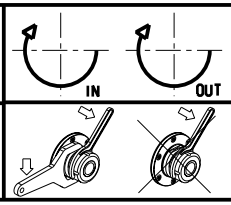

M.T. srl
Via Casino Albini 480
Tel. 0541/956034-957884
Fax 0541/956341
47842 S. GIOVANNI IN M. (RN)
e-mail: mtma@mtmarchetti.com
http://www.mtmarchetti.com

MT®

Subject to change without notice.