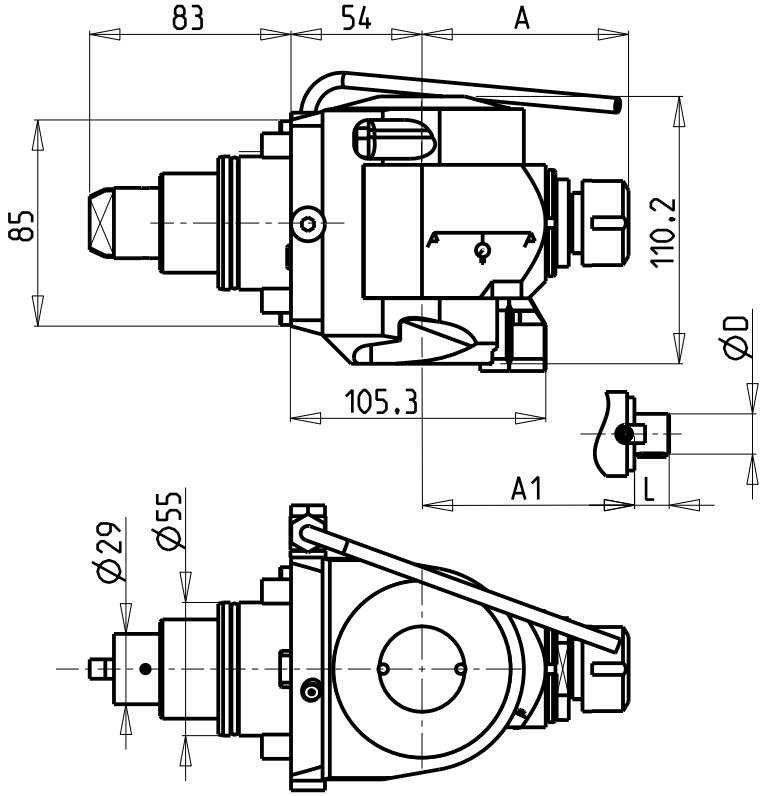

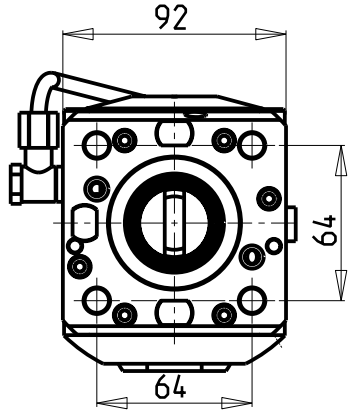

ATTENZIONE - ATTENTION - ACHTUNG

- VERIFICARE LE MISURE DI INGOMBRO PER POSSIBILE INTERFERENZA SU ALCUNI MODELLI DI MACCHINE
- Please check the overall sizes for possible interferences on some machine models
- Bitte überprüfen sie das ausmass um mögliche interferenzen auf einigen maschinen modellen zu vermeiden

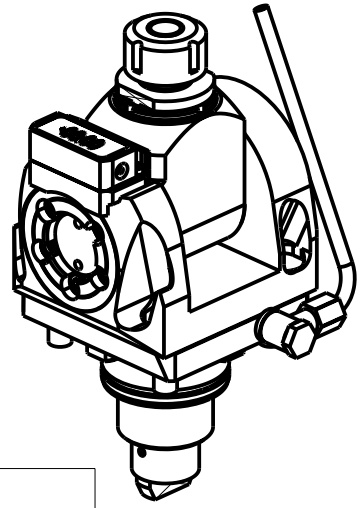

Cod. MT	Mandrino Spindle Spindel	I	RPM	Coppia Max Max Torque Max Drehmoment	Reversibile lato mandrino/contromandrino Reversible sub/main spindle side Umkehrbare Spindelseite/ Gegenspindelseite	Lubrificazione est. Ext. coolant Aussenkuehlung	A	A1	D	L	CHIAVI INCLUSE Keys included Schluessel inbegriffen		
DW02110120	ER20	1:1	6000	40Nm	X	X	85.16	-	-	-	CHSTER20	CHUB36	CHESL08
DW02110125	ER25	1:1	6000	40Nm	X	X	86.16	-	-	-	CHSTER25	CHUB36	CHESL08
DW02110516	Ø16x17	1:1	6000	40Nm	X	X	-	65	16	17	CH_VTCROCE_M08	CHUB36	CHESL08
DW02110522	Ø22x19	1:1	6000	40Nm	X	X	-	66	22	19	CH_VTCROCE_M10	CHUB36	CHESL08
DW02110519	Ø3/4"x3/4"	1:1	6000	40Nm	X	X	-	65	3/4"	3/4"	CH_VTCROCE_M08	CHUB36	CHESL08

EMAG

MOD: VL2 - VL2 P - VL4-V2 - VLC100 - VT2 - VTC100-4 (BMT55 SHORT)

MODULO MOTORIZZATO ORIENTABILE ±90° CON NONIO DIGITALE H=54mm
±90° adjustable angle driven tool with digital display H=54mm
Angetriebenes Werkzeug schwenkbar ±90° mit digital display H=54mm

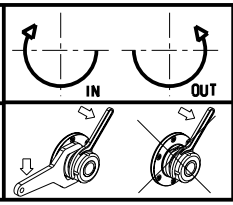

M.T. srl
Via Casino Albini 480
Tel. 0541/956034-957884
Fax 0541/956341
47842 S. GIOVANNI IN M. (RN)
e-mail: mtma@mtmarchetti.com
http://www.mtmarchetti.com

EMG333-1-01

Subject to change without notice.

09/2024