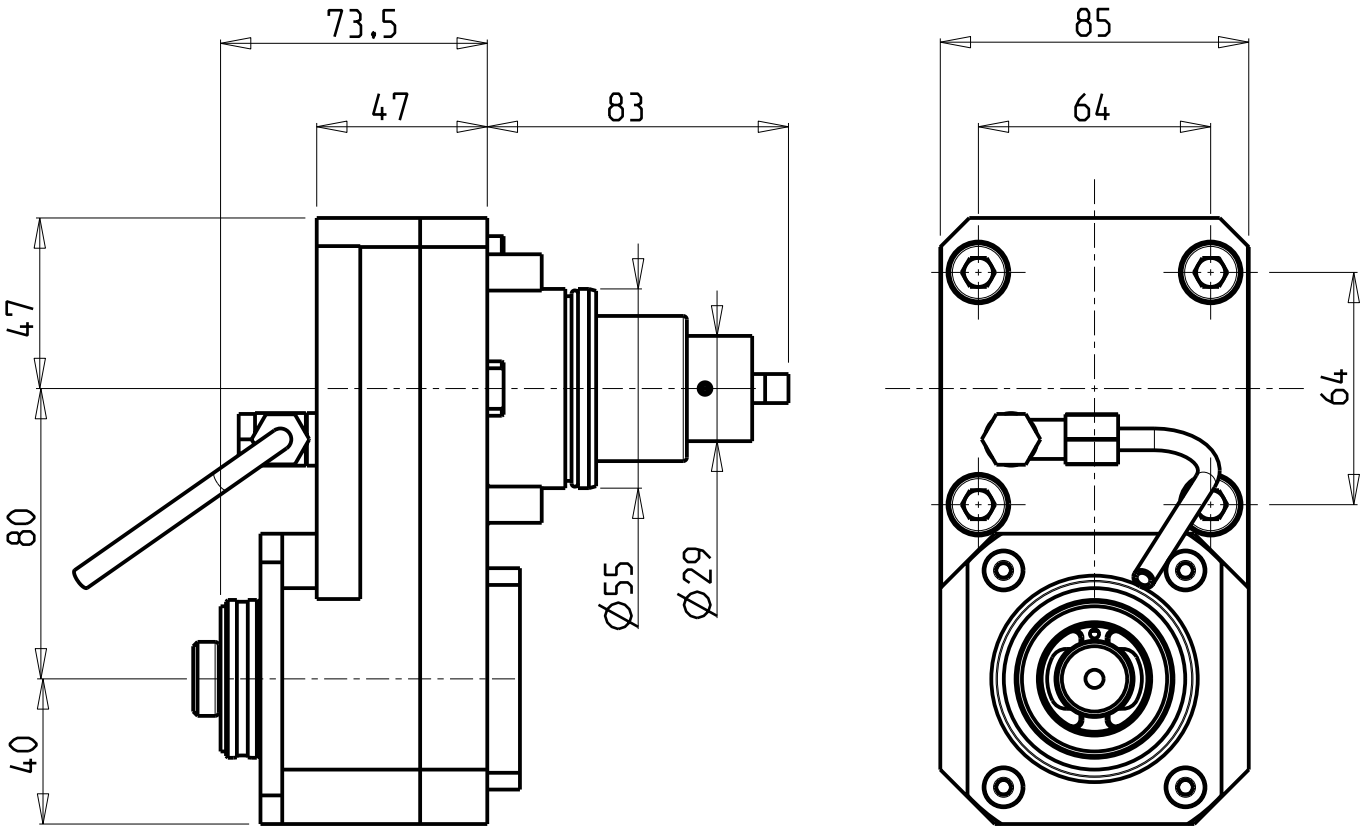

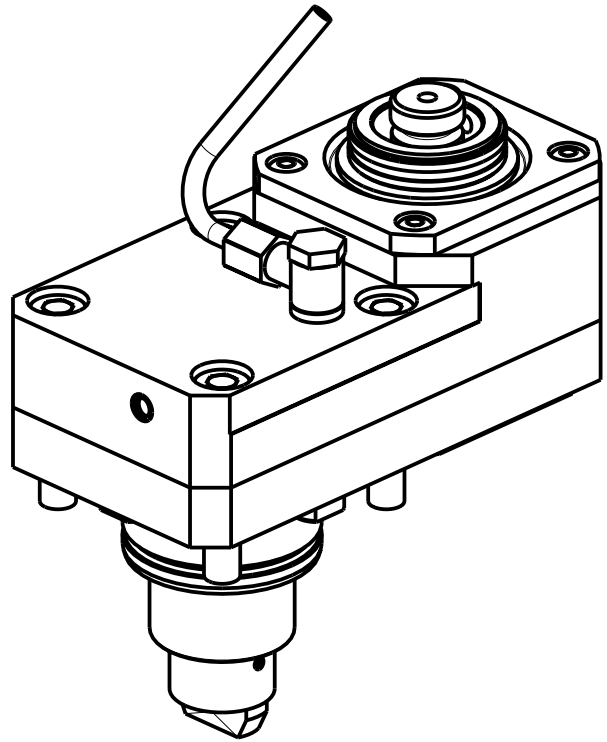

Cod. MT	Mandrino Spindle Spindel	I	RPM	Coppia Max Max Torque Max Drehmoment	Reversibile lato mandrino/contromandrino Reversible sub/main spindle side Umkehrbare Spindelseite/ Gegenspindelseite	Lubrificazione est. Ext. coolant Aussenkuehlung
DW01740140	HSK-40	2:1	3000	90Nm	X	X

EMAG

MOD: VL2 - VL2 P - VL4-V2 - VLC100 - VT2 - VTC100-4 (BMT55 SHORT)

MODULO MOTORIZZATO RADIALE HSK RIDOTTO I=2:1 DISASSATO IN Z 80mm
Radial HSK geared-down I=2:1 driven tool re-directed in Z by 80mm
Radial HSK angetriebenes Werkzeug untersetzt I=2:1 achsversetzt in Z um 80mm

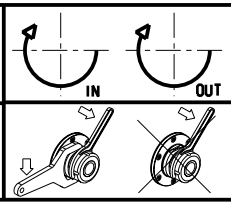

M.T. srl
Via Casino Albini 480
Tel. 0541/956034-957884
Fax 0541/956341
47842 S. GIOVANNI IN M. (RN)
e-mail: mtma@mtmarchetti.com
http://www.mtmarchetti.com

EMG030-1-20-H

Subject to change without notice.

09/2024