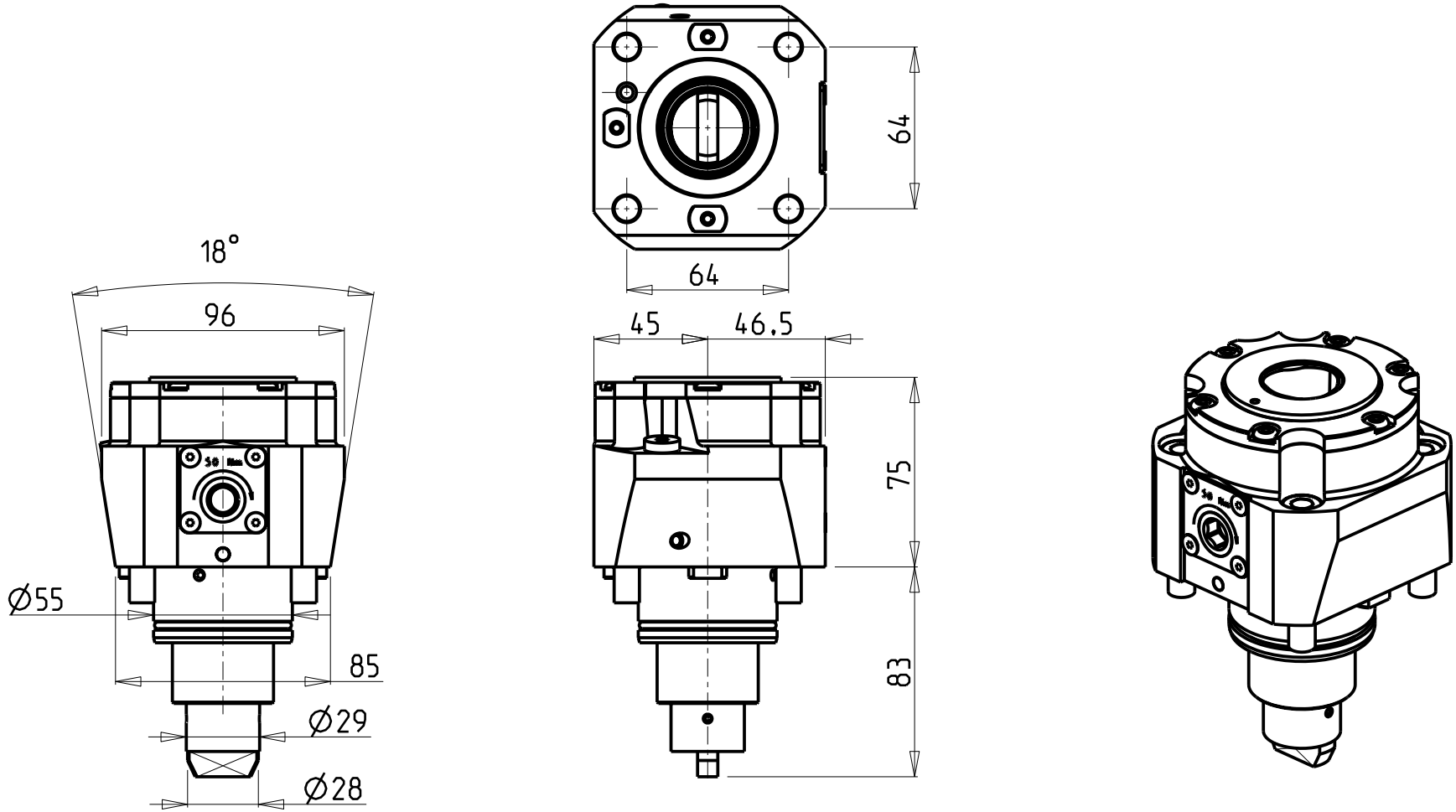

Cod. MT	TAGLIA Size Masse	I	RPM	Coppia Max Max Torque Max Drehmoment	Lubr.interna Coolant through Innenkuehlung	Lubr.esterna Ext. coolant Aussenkuehlung
DW04020240	C4	1:1	6000	50Nm	P=70bar	X

EMAG

MOD: VL2 - VL2 P - VL4-V2 - VLC100 - VT2 - VTC100-4 (BMT55 SHORT)

MODULO MOTORIZZATO RADIALE MT CAPTO
Radial driven tool MT CAPTO
Radial angetriebenes Werkzeug MT CAPTO

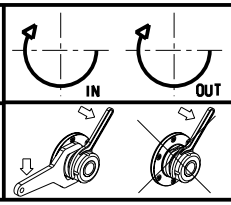

M.T. srl
Via Casino Albini 480
Tel. 0541/956034-957884
Fax 0541/956341
47842 S. GIOVANNI IN M. (RN)
e-mail: mtma@mtmarchetti.com
http://www.mtmarchetti.com

EMG010-A-40

Subject to change without notice.

09/2024