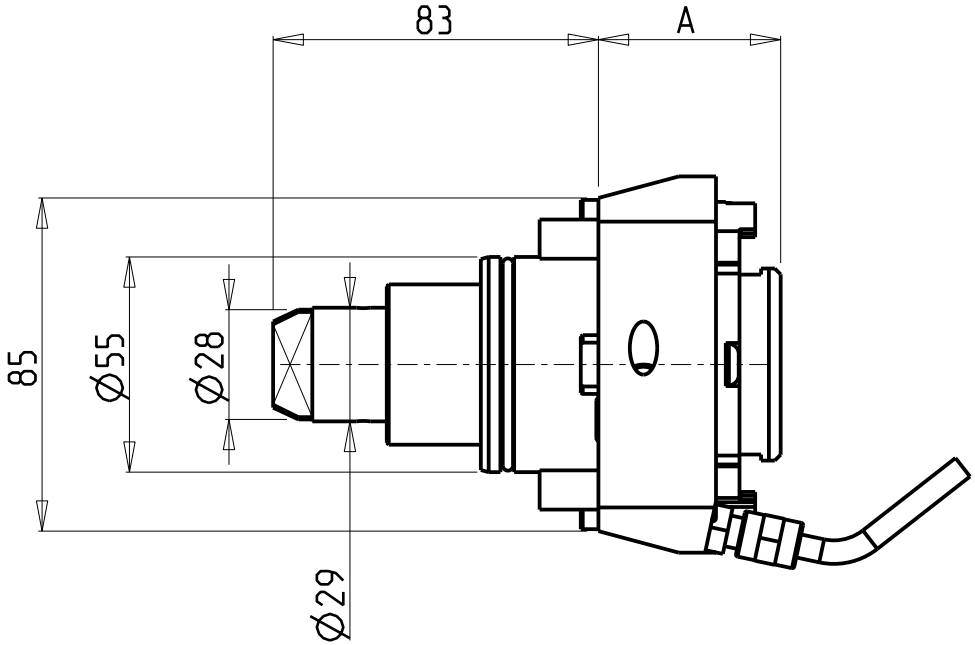

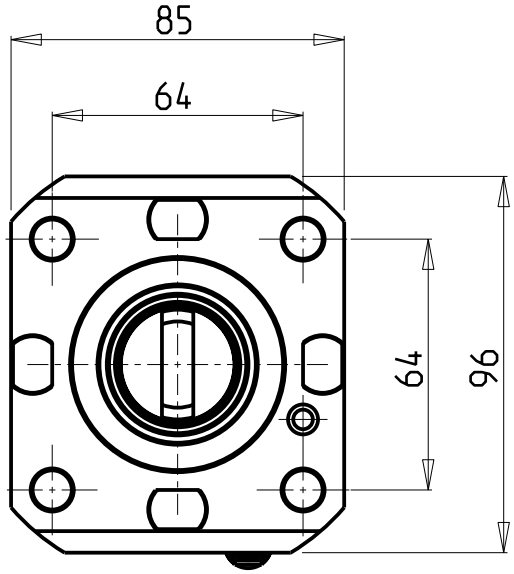

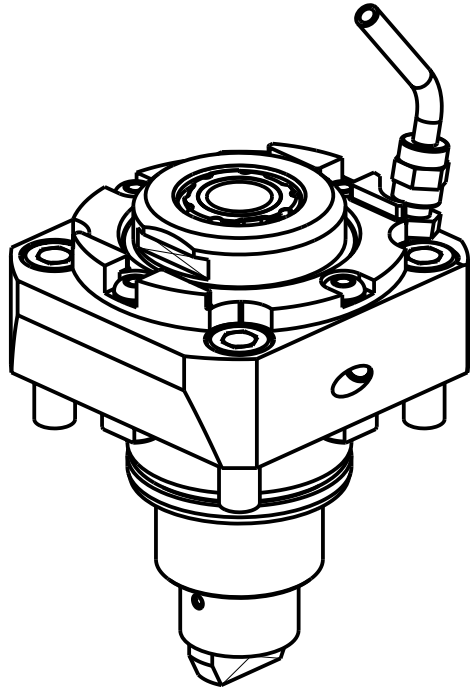

Cod. MT	Mandrino Spindle Spindel	I	RPM	Coppia Max Max Torque Max Drehmoment	Lubrificazione int. Coolant through Innenkuehlung	Lubrificazione est. Ext. coolant Aussenkuehlung	A	CHIAVI NON INCLUSE Keys not included Schluessel nicht einbegriffen		
DW02010325	ERA25	1:1	6000	50Nm	-	X	46.5	CHUB27	CHTAER25ZC •	OKU0650004 •
DW02010425	ERA25	1:1	6000	50Nm	P=30bar	X	59.5	CHUB27	CHTAER25ZC •	OKU0650004 •
DW02010132	ER32	1:1	6000	50Nm	-	X	71.2	-	CHSTER32	OKU0650004 •

• Chiave inclusa
• Key included
• Schluessel inbegriffen

EMAG

MOD: VL2 - VL2 P - VL4-V2 - VLC100 - VT2 - VTC100-4 (BMT55 SHORT)

MODULO MOTORIZZATO RADIALE
Radial driven tool
Radial angetriebenes Werkzeug

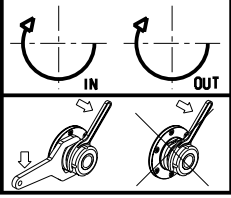

M.T. srl
Via Casino Albini 480
Tel. 0541/956034-957884
Fax 0541/956341
47842 S. GIOVANNI IN M. (RN)
e-mail: mtma@mtmarchetti.com
http://www.mtmarchetti.com

EMG010-1-00

Subject to change without notice.

09/2024